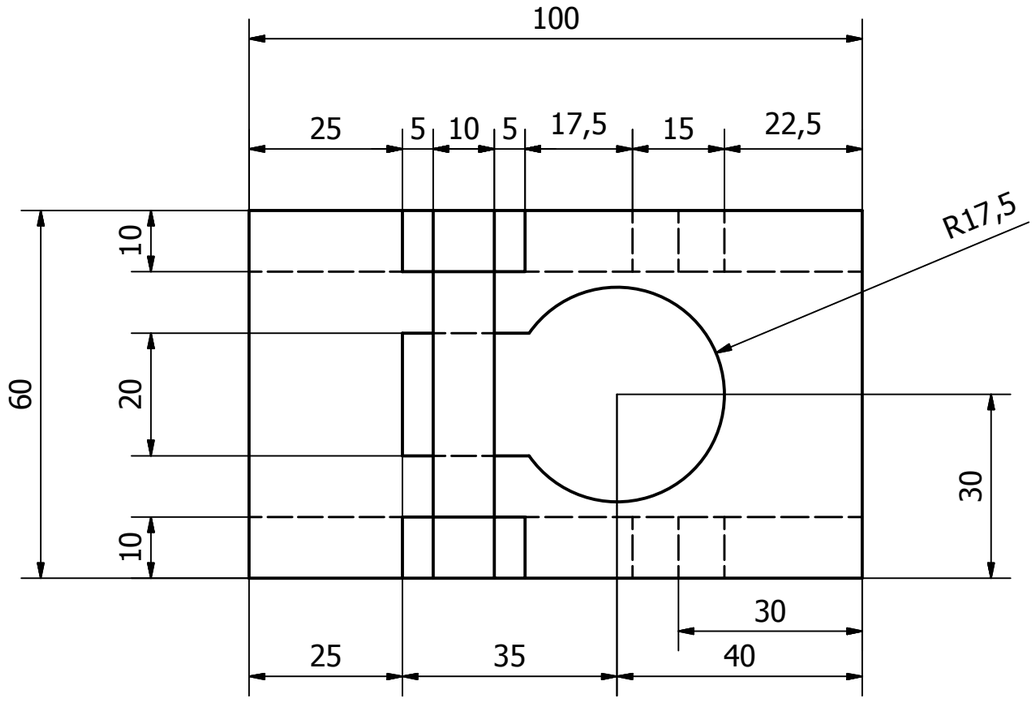

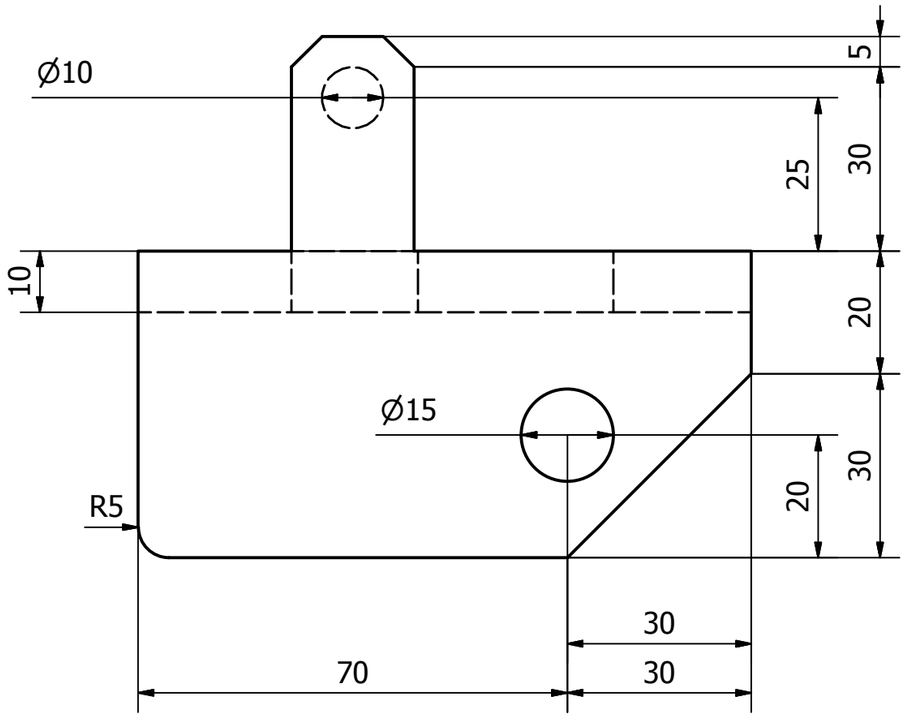

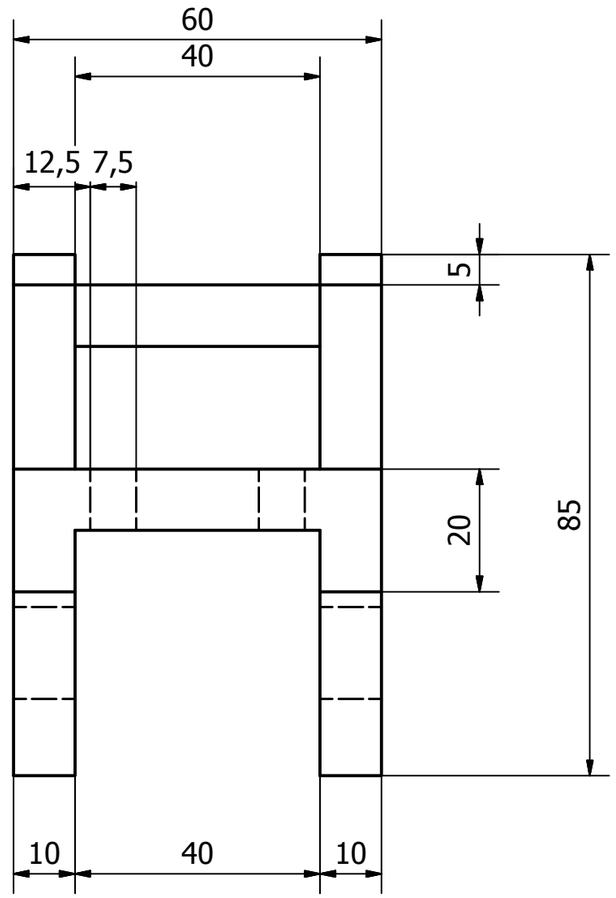

Designed by	Checked by	Approved by	Date		Date	
SMK N 1 SEYEGAN					Edition	Sheet