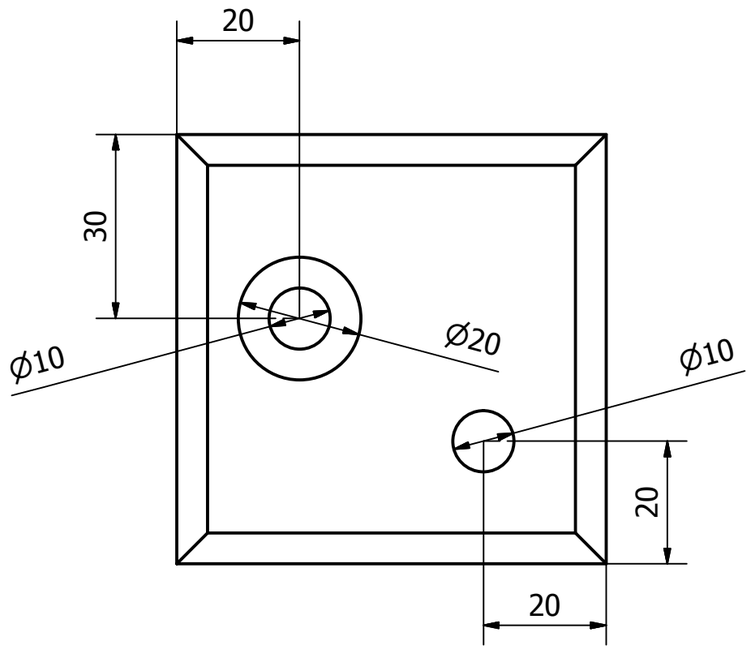


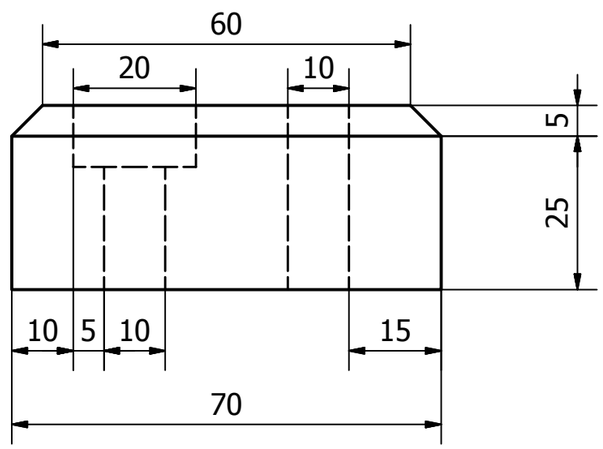


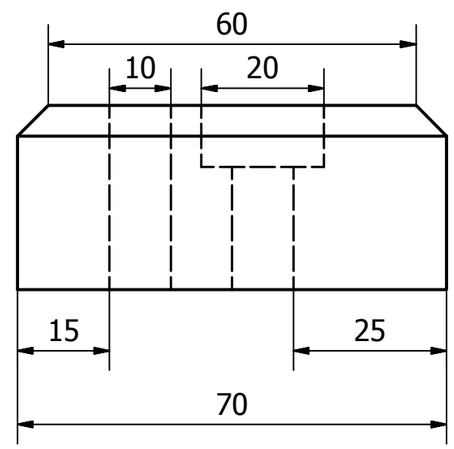


| Designed by | Checked by | Approved by | Date | | Date | |
|---|---|---|---|---|---|---|
| Samsung | | | | | | |

| | | |
|---|---|---|
| | Edition | Sheet |