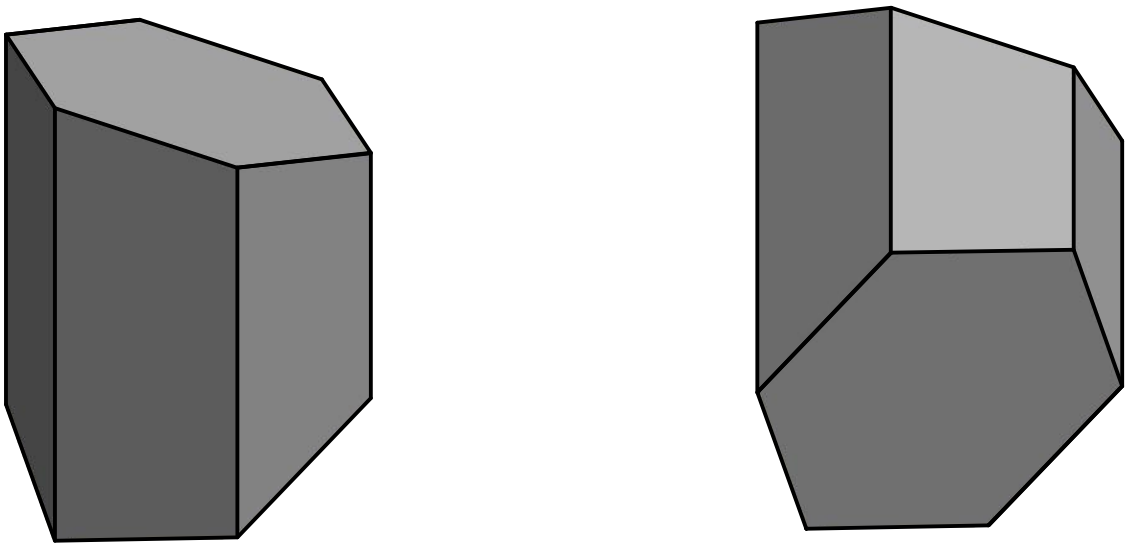

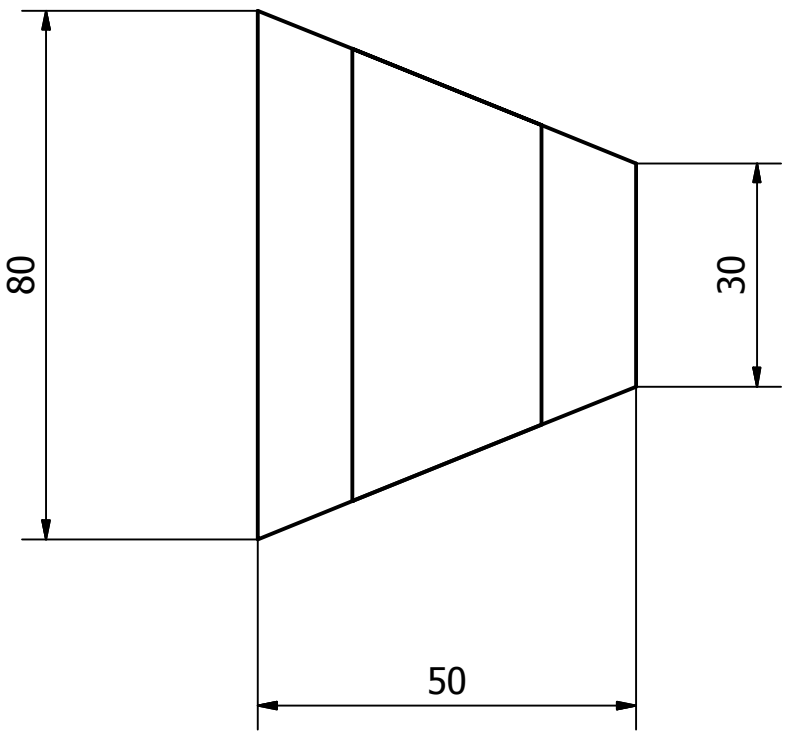

Designed by	Checked by	Approved by	Date		Date	
SMK N 1 SEYEGAN			Jobsheet Gambar Bentangan Prisma Segi Enam Terpancung			
					Edition	Sheet