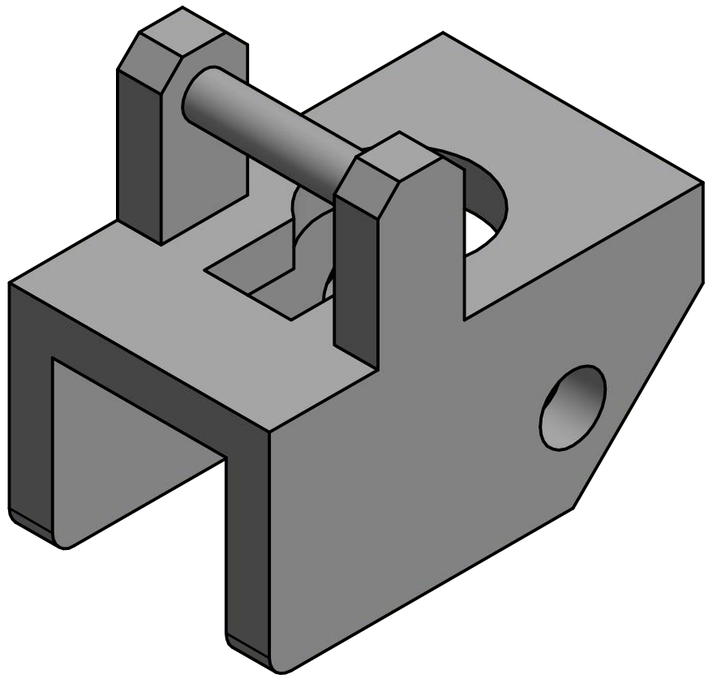

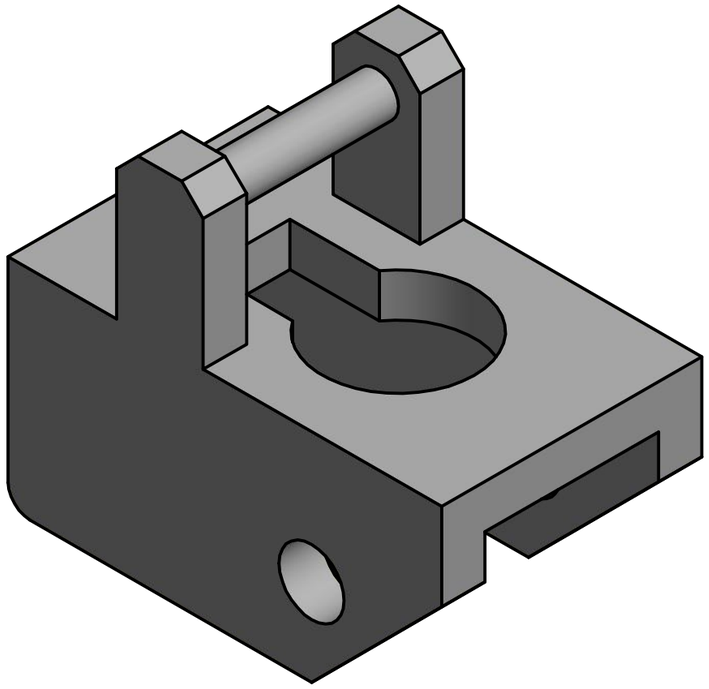

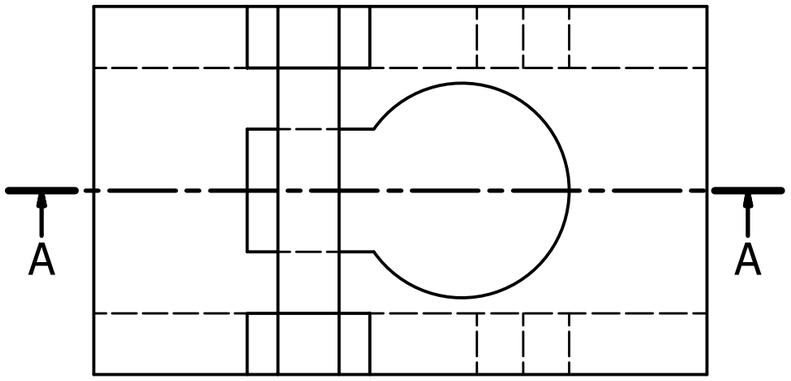

Designed by	Checked by	Approved by	Date	Date	
Samsung				9/6/2016	

Edition	Sheet
	1 / 1